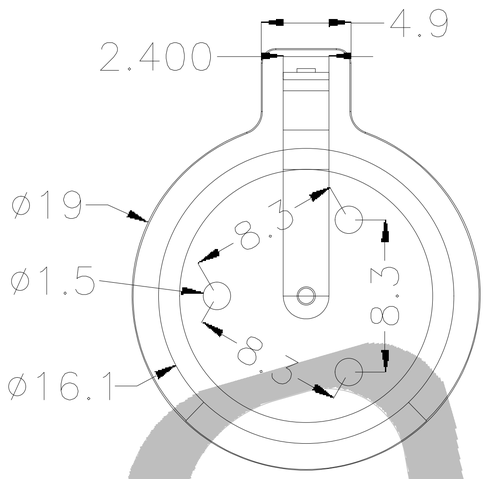

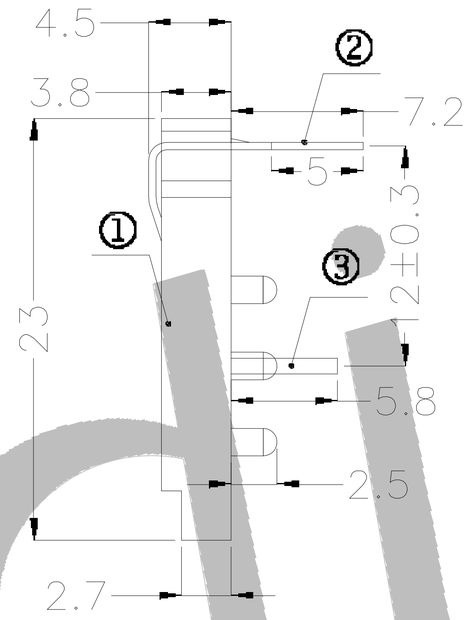

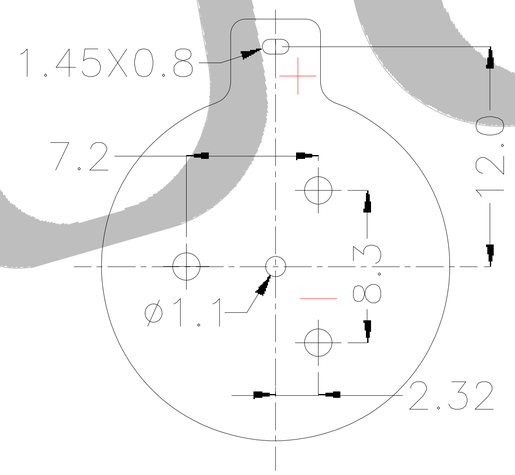

PCB Layout Diagram
Top View

NOTE:
1.MATERIAL:
a.HOUSING:PBT
b.CONTACT:Mn Steel,Brass
(SURFACE PLATING: Si100u"-120u")
SEE ORDERING INFORMATION
2.ELECTRIC:
a.CONTACT RESISTANCE: 30 MILLIOHMS MAX
b.INSULATION RESISTANCE: 1000 MEGA OHMS MIN
c.DIELECTNIC VOLTAGE: 500V AC ONE SEC LEVEL
d.OPERATING TEMPERATURE: -25°C~ +85°C

客户品名	
客户料号	

REV	ECN.NO.	Date
E		
D		
C		
B		
A	RELEASED	2020/5/10

Units	mm	Scale	2:1
Tolerance Unless Otherwise Specified			
X.X	~	±0.25	
X.XX	~	±0.20	
X.XXX	~	±0.10	
Angle	~	±0.50°	

Drawing By Date
Reviewed By Date
Approvai By Date

Odia® 广东澳迪亚电子有限公司
HTTP://WWW.ODIACHINA.COM

Date	2020/5/10	Title	BS-1620-1SnDIP
Sheet	1 of 1		
Thirt Angle Projection		Drawing No.	REV
		F/Name	A